Assignment 17

The ALU

Introduction

The ALU will be the last module of any complexity that we need to build before assembling all the parts into a working processor. Begin with the 1-bit ALU, which contains the circuitry for all of the operations except `slt`. For the `slt` instruction, the 1-bit ALU simply receives a `less` signal and passes it to the multiplexor.

For the other operations, the `a-inv` signal tells whether to invert the first operand, the `b-inv` signal tells whether to invert the second operand, the `c-in` bit is the carry-in bit, and the 2-bit `op` input tells the multiplexor which result (sum, difference, and, or) to pass through.

Then build the 2-bit ALU and test it. The 4-bit, 8-bit, and 16-bit ALUs all follow exactly the pattern of the 2-bit ALU. The 32-bit ALU also follows the pattern, but it includes the `SLT` module and the original `less` input, which is constant `0`.

The carry-out bit from the ALU will be ignored by the processor.

The Circuits

The circuits have been discussed in Lecture 34 and all necessary circuit diagrams are in the slideshow.

The 1-Bit ALU

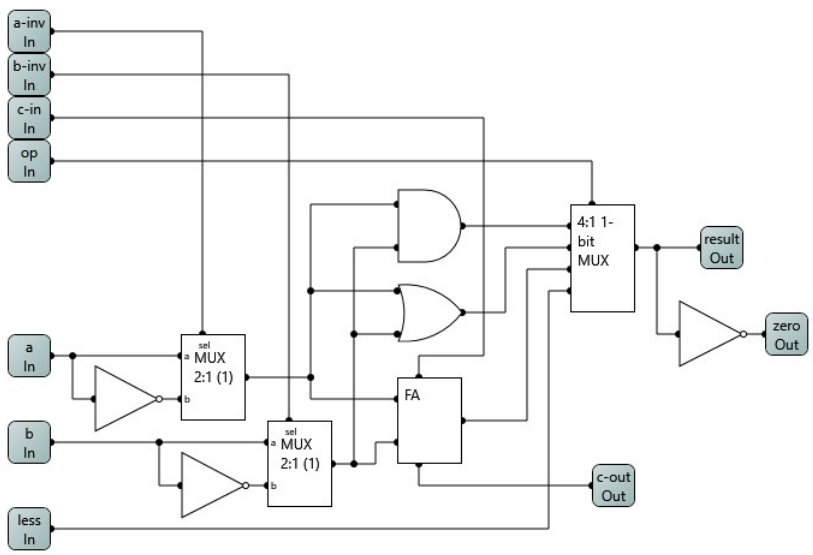

The 2-Bit ALU

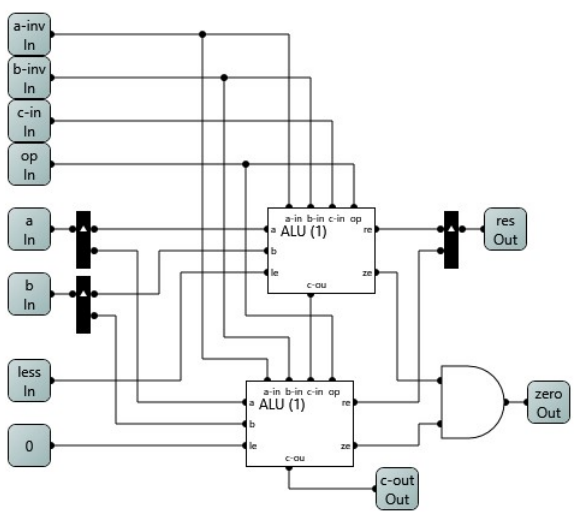

The 32-Bit ALU

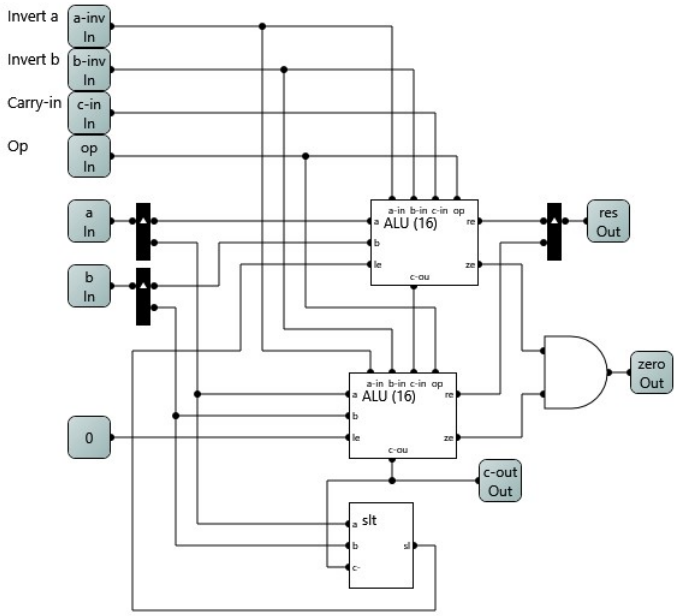

Due Date

This assignment will not be collected.